CONSTRUCTION	ROTATION	DISCH PORT
VERTICAL TOP	CLOCKWISE (CW)	RIGHT SIDE
	COUNTERCLOCKWISE (CCW)	LEFT SIDE
VERTICAL BOTTOM	CLOCKWISE (CW)	LEFT SIDE
	COUNTERCLOCKWISE (CCW)	RIGHT SIDE

ESTIMATED WEIGHT – 1200 LBS

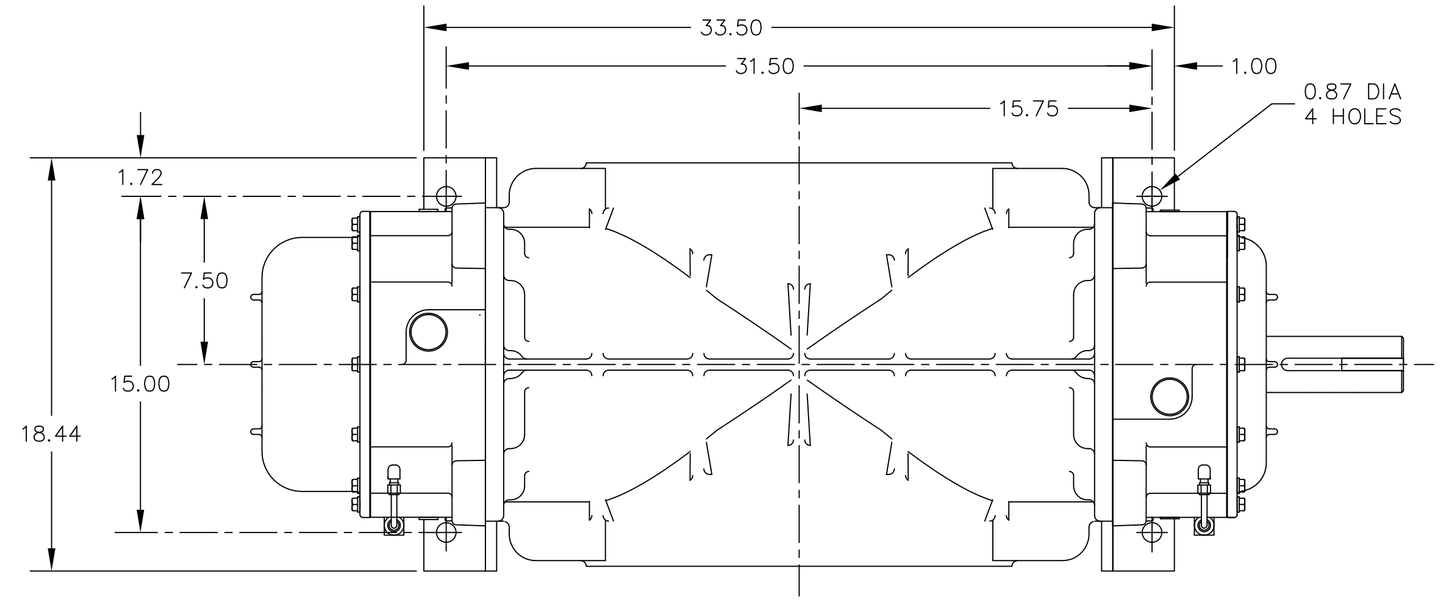

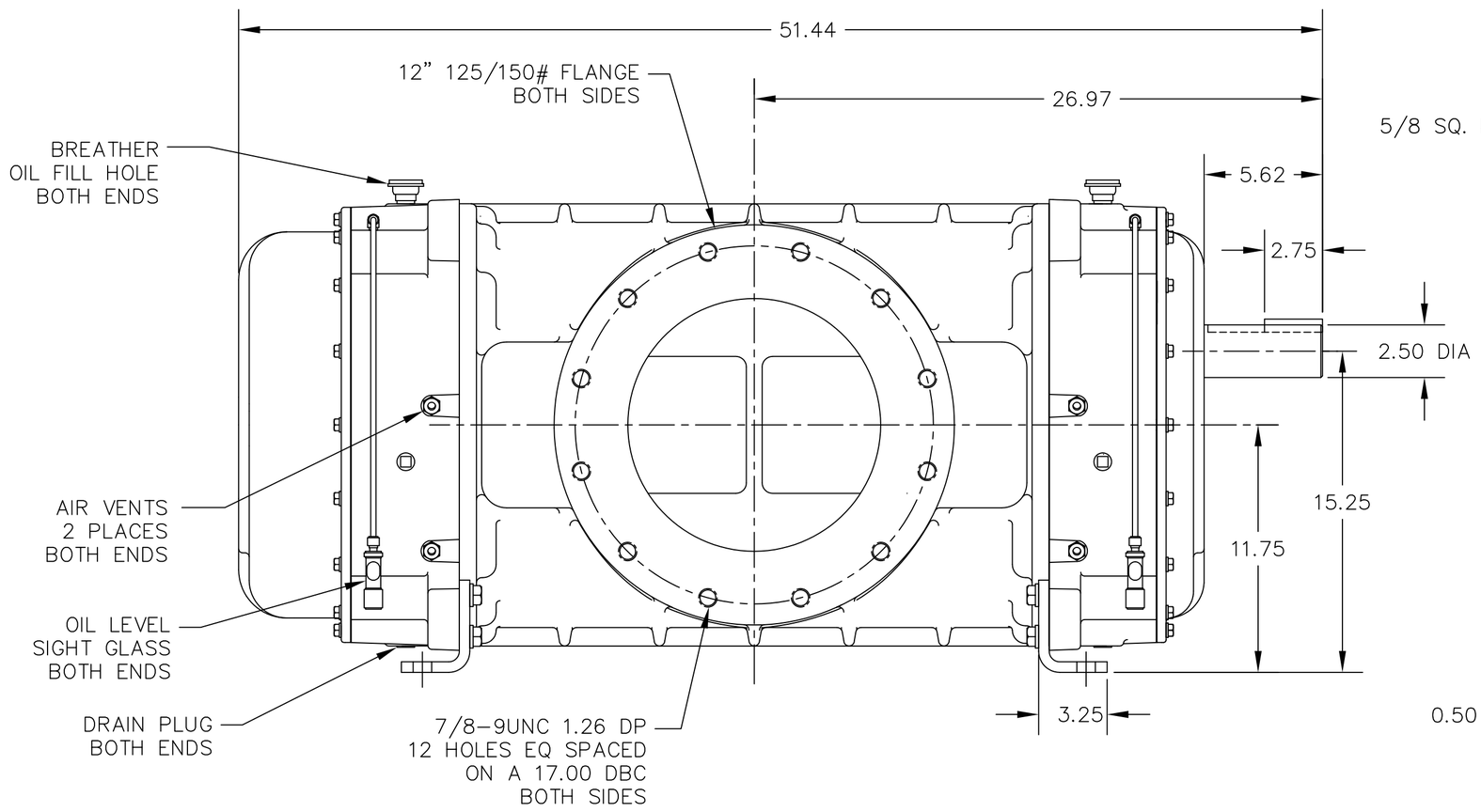

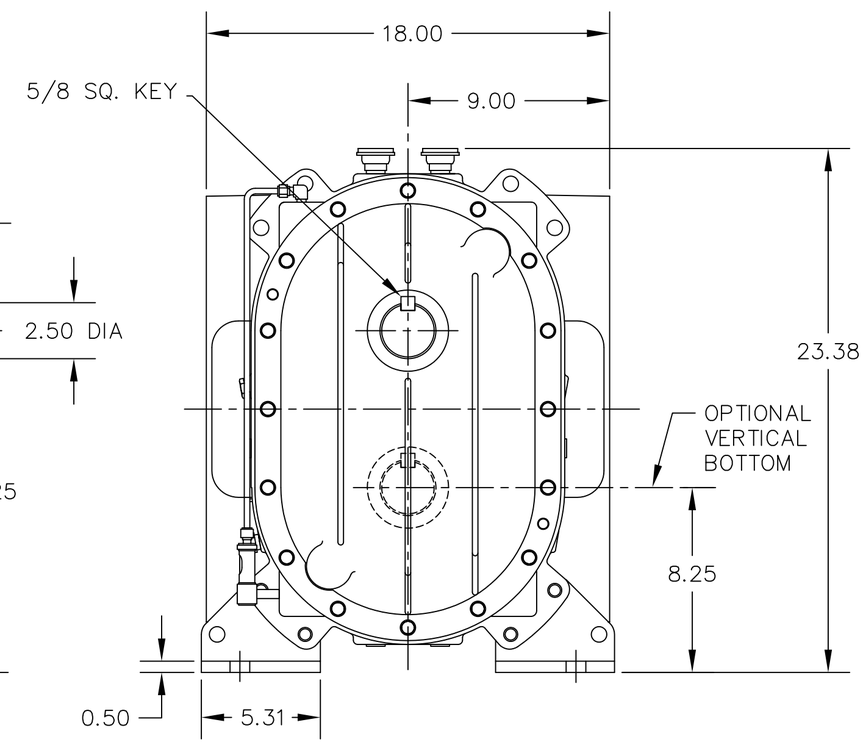

CONFIDENTIAL – THE INFORMATION CONTAINED IN THIS DOCUMENT IS THE PROPERTY OF GARDNER DENVER MACHINERY INC. IT IS NOT FOR PUBLIC DISCLOSURE. POSSESSION OF THE INFORMATION DOES NOT CONVEY ANY RIGHT TO LOAN, SELL OR DISCLOSE THE INFORMATION. UNAUTHORIZED REPRODUCTION OR USE OF THE INFORMATION IS PROHIBITED. THIS DOCUMENT IS TO BE RETURNED TO GARDNER DENVER MACHINERY INC. UPON COMPLETION OF THE PURPOSE FOR WHICH IT IS LOANED OR UPON REQUEST.

TAP DRILL DEPTHS ARE MAXIMUM. FULL THD. DEPTHS ARE MINIMUM.

FINISH OF CHAMFERS & FILLETS TO CONFORM TO ROUGHEST ADJACENT AREA

SURFACE ROUGHNESS MAX. PER ASA SPEC.

LET.	REVISION	DATE	DR.	CK.	LET.	REVISION	DATE	DR.	CK.	LET.	REVISION	DATE	DR.	CK.
A	RELEASED (C/M 1028500)													

Gardner Denver

Gardner Denver Inc.
Peachtree City, Georgia

FOR ALL CURRENT SPECIFICATIONS REFER TO BILL OF MATERIAL

NAME OUTLINE–BARE UNIT
7028 DUROFLOW VERTICAL

TOLERANCES: UNLESS OTHERWISE SPECIFIED
DECIMAL .XX ± .02 .XXX ± .010
NON–DECIMAL ± 1/16 ANGLES ± 1°

DR.	SLM	11/22/05	MET. APP.	
CK.	SM	11/22/05	ENG. APP.	–
SCALE	3/16			

SHEET 1 OF 1

HEAT TREAT SPEC. –
–

311GGG800

FILE NO. C CAD/CAM