REVISION HISTORY					
ZONE	REV	DESCRIPTION	DATE	DWN	CHK
	A	RELEASED PER ECN 1045640			

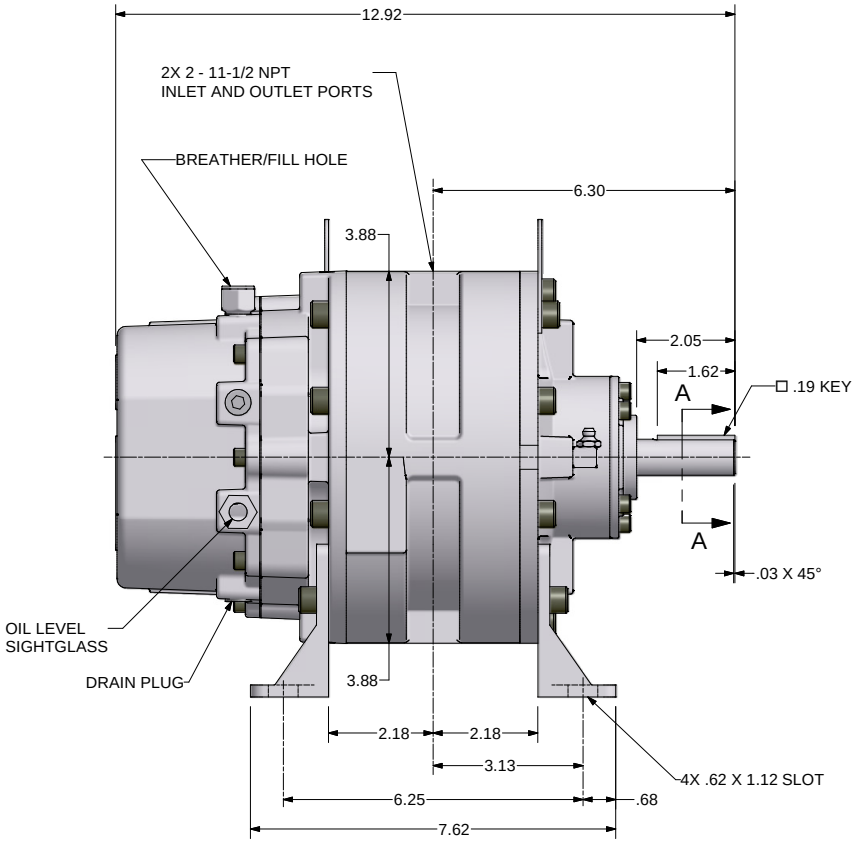

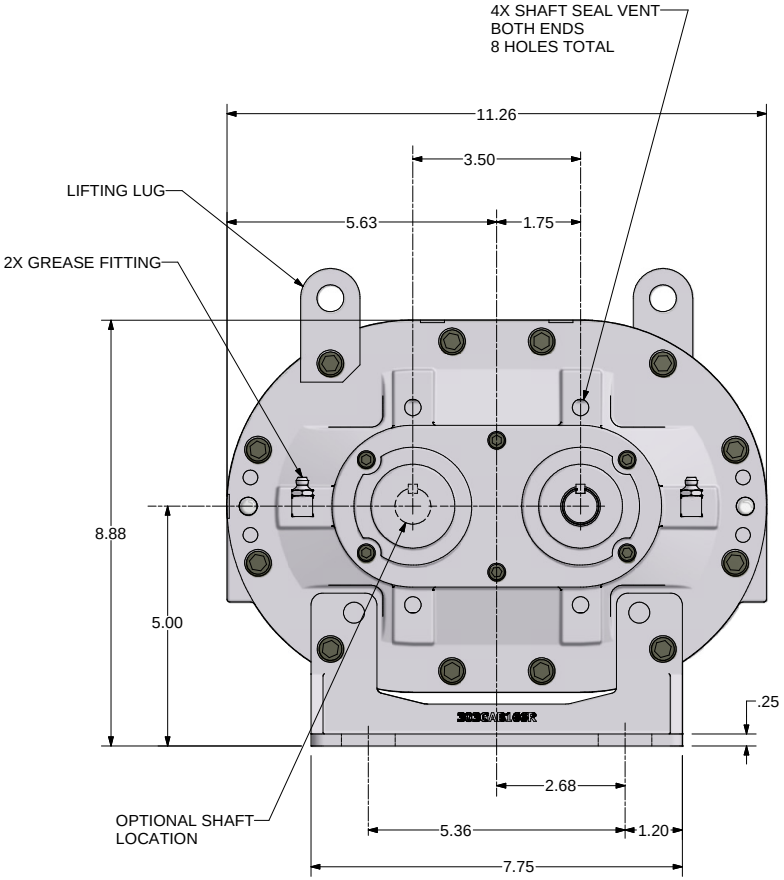

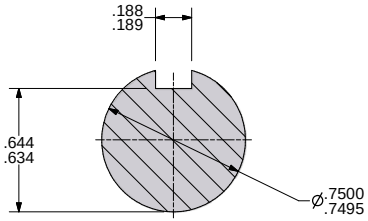

SECTION A-A
SCALE 4 : 1

ALL ROTATIONS AND PORT LOCATIONS WHEN FACING SHAFT END

CONSTRUCTION	ROTATION	DISCHARGE PORT
HORIZONTAL RIGHT	CLOCK WISE (CW)	BOTTOM SIDE
	COUNTERCLOCKWISE (CCW)	TOP SIDE
HORIZONTAL LEFT	CLOCKWISE (CW)	TOP SIDE
	COUNTERCLOCKWISE (CCW)	BOTTOM SIDE

FINISH OF CHAMFERS AND FILLETS TO CONFORM TO ROUGHEST ADJACENT AREA.
SURFACE ROUGHNESS MAXIMUM PER ASME B46.1.
FULL THREAD DEPTHS ARE MINIMUM.

UNLESS OTHERWISE SPECIFIED DIMENSIONS ARE IN INCHES

TOL. ON DECIMALS: X = ±.05
TOL. ON DECIMALS: XX = ±.02
TOL. ON DECIMALS: XXX = ±AS SPECIFIED
TOL. ON ANGLES: ± 0'-30'

THIRD ANGLE PROJECTION

CONFIDENTIAL - THE INFORMATION CONTAINED IN THIS DOCUMENT IS THE PROPERTY OF GARDNER DENVER, INC. IT IS NOT FOR PUBLIC DISCLOSURE. POSSESSION OF THE INFORMATION DOES NOT CONVEY ANY RIGHT TO LOAN, SELL OR DISCLOSE THE INFORMATION. UNAUTHORIZED REPRODUCTION OR USE OF THE INFORMATION IS PROHIBITED. THIS DOCUMENT IS TO BE RETURNED TO GARDNER DENVER, INC. UPON THE COMPLETION OF THE PURPOSE FOR WHICH IT IS LOANED OR UPON REQUEST.

DIMENSIONING AND TOLERANCING PER ASME Y14.5M-1994
THREADS PER ASME B1.1 GAGING SYSTEM 21 U.O.S., ANSI B1.20.1 & B1.20.3

Gardner Denver
Gardner Denver Inc.
Quincy, IL.

HEAT TREATMENT | ENG. REF:

TITLE: OUTLINE-BARE UNIT
3MR LEGEND GRS-SPL

DWN BY RRB 4/17/2009	SIZE E	ENGR APPROVAL WSC	DWG NO 321GAB800	REV A
CK'D BY RNS 4/17/2009	SCALE FULL		SHEET 1 OF 1	