REVISION HISTORY					
ZONE	REV	DESCRIPTION	DATE	DWN	CHK
	A	RELEASED PER ECN 1041337			

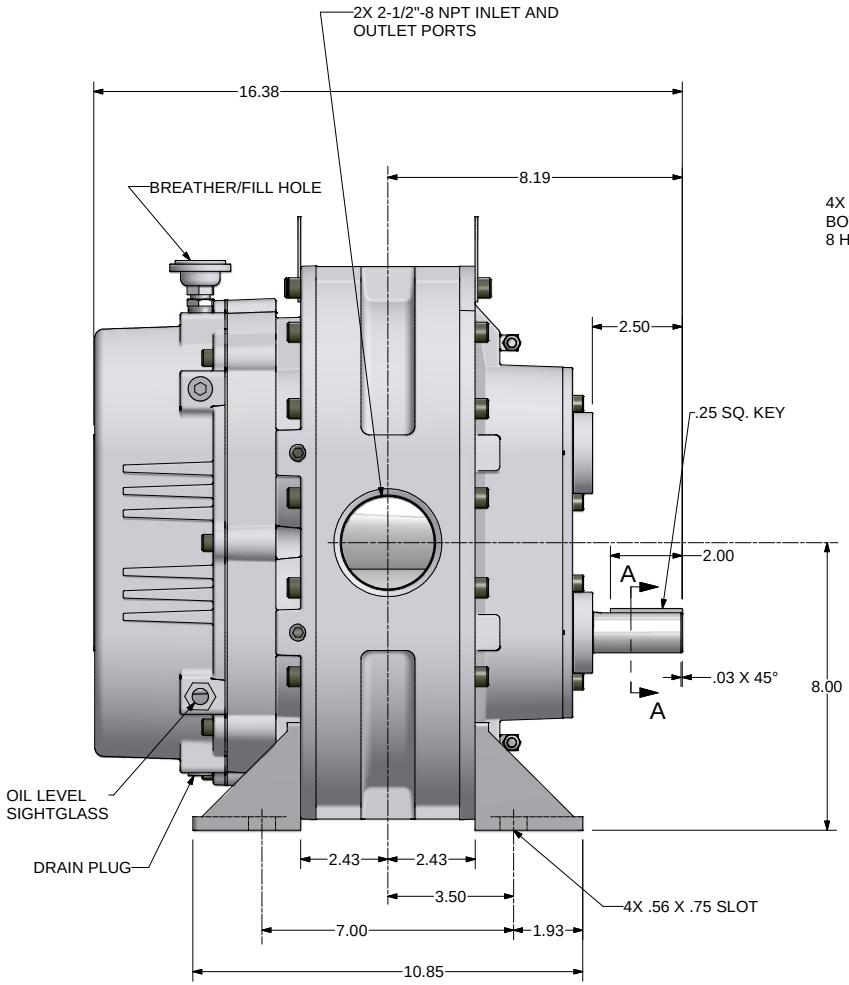

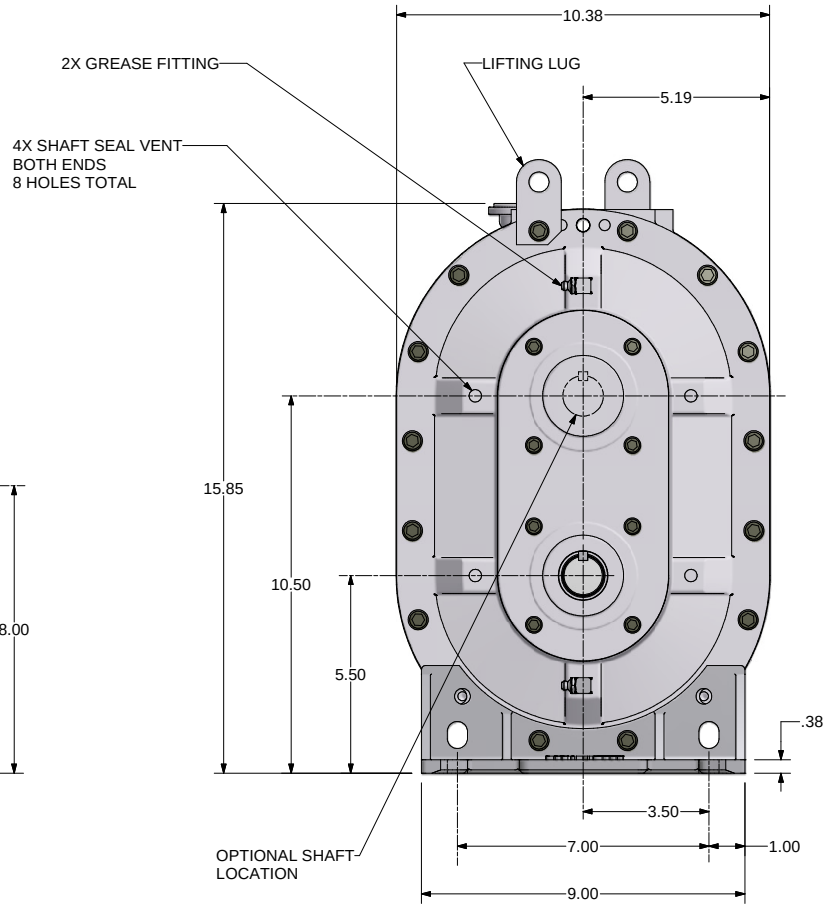

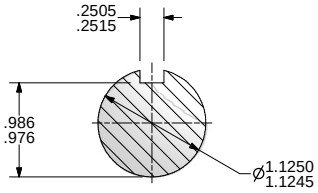

SECTION A-A
SCALE 2 : 1

ALL ROTATIONS AND PORT LOCATIONS WHEN FACING SHAFT END

CONSTRUCTION	ROTATION	DISCHARGE PORT
VERTICAL BOTTOM	CLOCK WISE (CW)	LEFT SIDE
	COUNTERCLOCKWISE (CCW)	RIGHT SIDE
VERTICAL TOP	CLOCKWISE (CW)	RIGHT SIDE
	COUNTERCLOCKWISE (CCW)	LEFT SIDE

FINISH OF CHAMFERS AND FILLETS TO CONFORM TO ROUGHEST ADJACENT AREA.
SURFACE ROUGHNESS MAXIMUM PER ASME B46.1.
FULL THREAD DEPTHS ARE MINIMUM.

UNLESS OTHERWISE SPECIFIED
DIMENSIONS ARE IN INCHES

TOL. ON DECIMALS: X = ±.05
TOL. ON DECIMALS: XX = ±.02
TOL. ON DECIMALS: XXX = ±AS SPECIFIED
TOL. ON ANGLES: ± 0'-30'

THIRD ANGLE PROJECTION

CONFIDENTIAL - THE INFORMATION CONTAINED IN THIS DOCUMENT IS THE PROPERTY OF GARDNER DENVER, INC. IT IS NOT FOR PUBLIC DISCLOSURE. POSSESSION OF THE INFORMATION DOES NOT CONVEY ANY RIGHT TO LOAN, SELL OR DISCLOSE THE INFORMATION. UNAUTHORIZED REPRODUCTION OR USE OF THE INFORMATION IS PROHIBITED. THIS DOCUMENT IS TO BE RETURNED TO GARDNER DENVER, INC. UPON THE COMPLETION OF THE PURPOSE FOR WHICH IT IS LOANED OR UPON REQUEST.

DIMENSIONING AND TOLERANCING PER ASME Y14.5M-1994
THREADS PER ASME B1.1 GAGING SYSTEM 21 U.O.S., ANSI B1.20.1 & B1.20.3

Gardner Denver
Gardner Denver Inc.
Quincy, IL

HEAT TREATMENT | ENG. REF:

TITLE OUTLINE-BARE UNIT
5HVR LEGEND GRS-SPL

DWN BY RRB 6/12/2008	SIZE E	MODEL APPROVAL WSC	DWG NO 323GAE800	REV A
CK'D BY RNS 6/12/2008	SCALE 3/4		SHEET 1 OF 1	