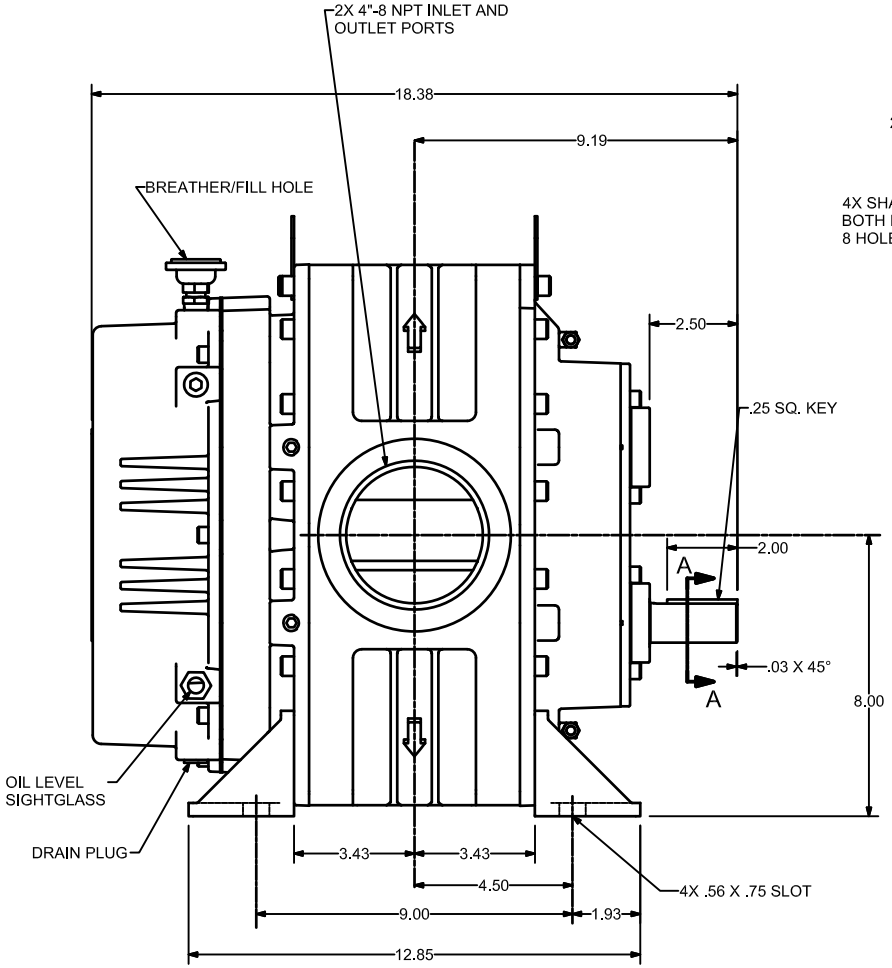

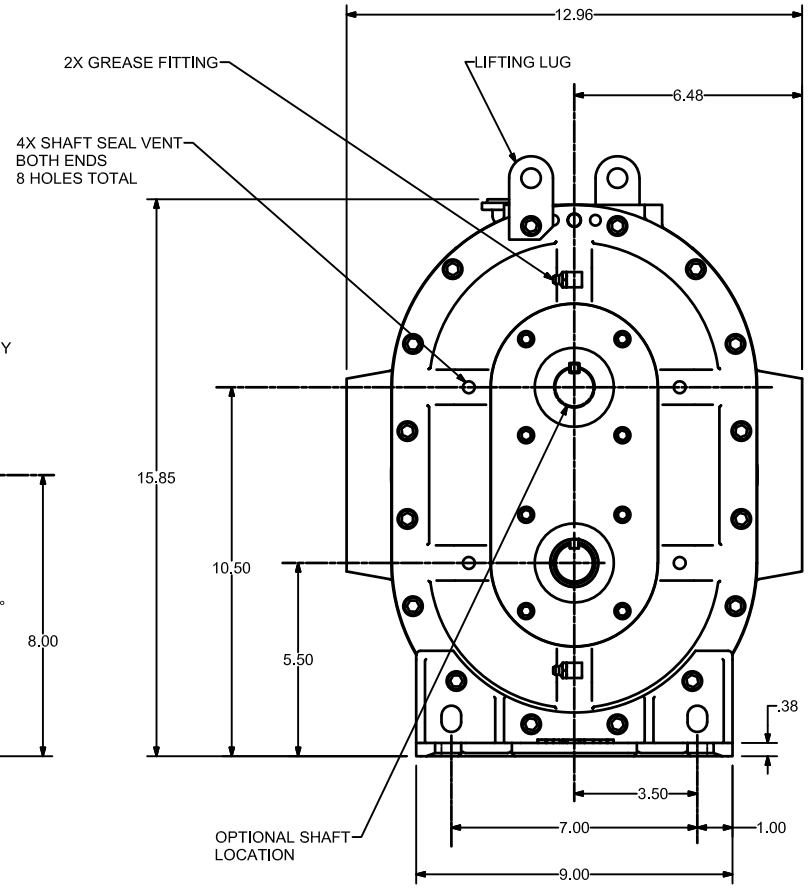

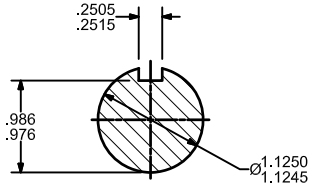

SECTION A-A
SCALE 2 : 1

THE "Q" SERIES IS DISCHARGE TIMED. THE ARROWS ON THE CYLINDER INDICATE DIRECTION OF FLOW AND POINT TOWARDS THE DISCHARGE PORT. PORT AND SHAFT LOCATIONS AND ALL ROTATIONS ARE DETERMINED WHEN FACING SHAFT END.

VERTICAL BOTTOM, RIGHT DISCHARGE IS SHOWN.

CONSTRUCTION	ROTATION	DISCHARGE PORT
VERTICAL BOTTOM	CLOCK WISE (CW)	LEFT SIDE
	COUNTERCLOCKWISE (CCW)	RIGHT SIDE
VERTICAL TOP	CLOCKWISE (CW)	RIGHT SIDE
	COUNTERCLOCKWISE (CCW)	LEFT SIDE

OUTLINE-BARE UNIT
5MRQ LEGEND GRS-SPL